CAXTON™

Technical Information

Recommended Accessory			
K-8998	P-Trap	❑ CP	❑ Other_____

ADA compliant		
Fixture*:	Basin area	Water depth
K-2209	15″ (38.1 cm) x 12″ (30.5 cm)	4″ (10.2 cm)
K-2210/ K-2210-L/ K-2210-N/ K-2210-G	17″ (43.2 cm) x 14″ (35.6 cm)	4″ (10.2 cm)
K-2211/ K-2211-G/ K-2211-L	19″ (48.3 cm) x 15″ (38.1 cm)	4″ (10.2 cm)
Drain hole	1-3/4″ (4.4 cm) D.	
* Approximate measurements for comparison only.		

Included components:	
Basin clamp assembly (not included with K-2210-L and K-2211-L)	52047
Cut-out template, K-2209	85838-7
Cut-out template, K-2210	1002975-7
Cut-out template, K-2211	1018997-7

Installation Notes

Install this product according to the installation guide.

Supplied basin clamp assemblies require 1″ (2.5 cm) minimum countertop thickness. Installer must supply anchors for thinner countertops.

K-2209: (X) = 14" (35.6 cm), (Y) = 17" (43.2 cm)
K-2210: (X) = 16-1/4" (41.3 cm), (Y) = 19-1/4" (48.9 cm)
K-2211: (X) = 17-1/4" (43.8 cm), (Y) = 21-1/4" (54 cm)

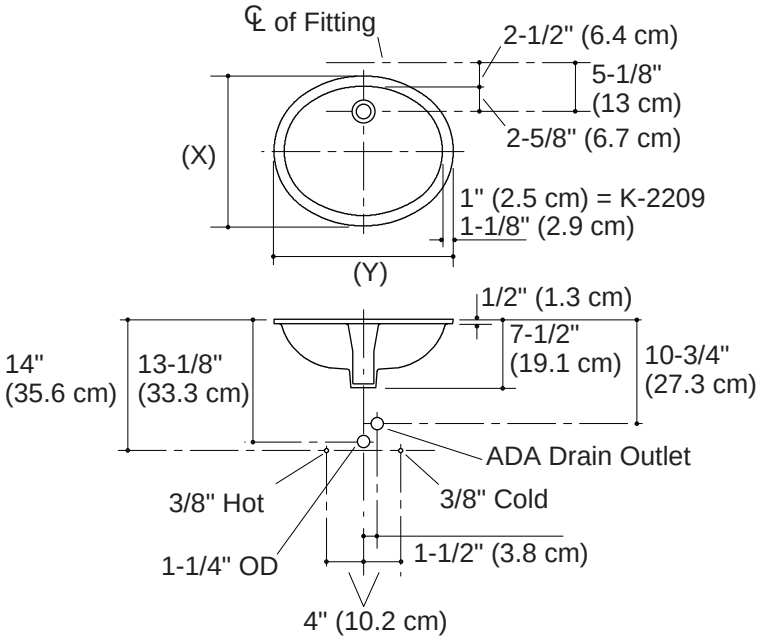

Standard Installation

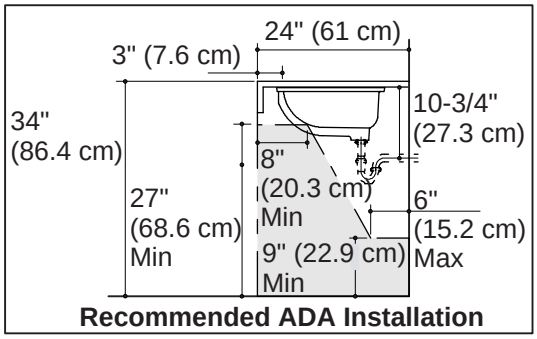

Recommended ADA Installation

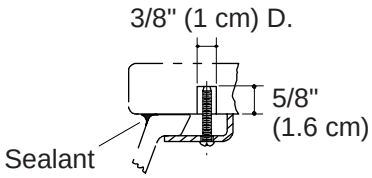

Marble Installation

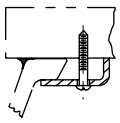

Wood Installation

Product Diagram

THE BOLD LOOK OF KOHLER®